VANE MOTORS LZB14-L

Lubrication free

0.11 – 0.16 kW
0.15 – 0.21 hp

EX certification valid for fixture mounted use only with a maximum surrounding temperature of +40°C (104°F).

For optional vanes and accessories see chapter Accessories.

Data at air pressure 6.3 bar (91 psi)

Model Lubrication free	Max output kW	Max output hp	Speed at max output r/min	Torque at max output Nm	Torque at max output lb-ft	Min starting torque Nm	Min starting torque lb-ft	Stall torque Nm	Stall torque lb-ft	Free speed r/min	Air consumption at max output l/s	Air consumption at max output cfm	Weight kg	Weight lb	Shaft loading code [1]	ATEX code	Ordering No.
Clockwise rotation (Keyed shaft)																	
LZB14-L-A190-11	0.16	0.21	9100	0.17	0.13	0.29	0.21	0.34	0.25	19500	4.0	8.5	0.30	0.66	a	Ex II 2GD c T4 IIC T110°C	8411 0113 00
LZB14-L-A048-11	0.16	0.21	2200	0.7	0.52	1.23	0.91	1.4	1.03	4800	4.0	8.5	0.30	0.66	a	Ex II 2GD c T6 IIC T85°C	8411 0113 18
LZB14-L-A029-11	0.16	0.21	1330	1.15	0.85	2	1.48	2.3	1.7	2900	4.0	8.5	0.30	0.66	a	Ex II 2GD c T6 IIC T85°C	8411 0113 26
LZB14-L-A012-11	0.16	0.21	530	2.9	2.1	5.1	3.8	5.8	4.28	1140	4.0	8.5	0.33	0.73	a	Ex II 2GD c T6 IIC T85°C	8411 0113 34
LZB14-L-A007-11	0.16	0.21	320	4.8	3.5	8.5	6.27	9.6	7.1	700	4.0	8.5	0.33	0.73	a	Ex II 2GD c T6 IIC T85°C	8411 0113 42
Clockwise rotation (Threaded shaft)																	
LZB14-L-A190-12	0.16	0.21	9100	0.17	0.13	0.29	0.21	0.34	0.25	19500	4.0	8.5	0.30	0.66	a	Ex II 2GD c T4 IIC T110°C	8411 0114 09
LZB14-L-A048-12	0.16	0.21	2200	0.7	0.52	1.23	0.91	1.4	1.03	4800	4.0	8.5	0.30	0.66	a	Ex II 2GD c T6 IIC T85°C	8411 0114 17
LZB14-L-A029-12	0.16	0.21	1330	1.15	0.85	2.0	1.48	2.3	1.7	2900	4.0	8.5	0.30	0.66	a	Ex II 2GD c T6 IIC T85°C	8411 0114 25
LZB14-L-A012-12	0.16	0.21	530	2.9	2.1	5.1	3.8	5.8	4.28	1140	4.0	8.5	0.33	0.73	a	Ex II 2GD c T6 IIC T85°C	8411 0114 33
LZB14-L-A007-12	0.16	0.21	320	4.8	3.5	8.5	6.27	9.6	7.1	700	4.0	8.5	0.33	0.73	a	Ex II 2GD c T6 IIC T85°C	8411 0114 41
Anti-clockwise rotation (Keyed shaft)																	
LZB14-L-AV190-11	0.16	0.21	9100	0.17	0.13	0.23	0.17	0.34	0.25	19500	4.0	8.5	0.30	0.66	a	Ex II 2GD c T4 IIC T110°C	8411 0117 06
LZB14-L-AV048-11	0.16	0.21	2200	0.7	0.52	0.99	0.73	1.4	1.03	4800	4.0	8.5	0.30	0.66	a	Ex II 2GD c T6 IIC T85°C	8411 0117 14
LZB14-L-AV029-11	0.16	0.21	1330	1.15	0.85	1.63	1.2	2.3	1.7	2900	4.0	8.5	0.30	0.66	a	Ex II 2GD c T6 IIC T85°C	8411 0117 22
LZB14-L-AV012-11	0.16	0.21	530	2.9	2.1	4.1	3.0	5.8	4.3	1140	4.0	8.5	0.33	0.73	a	Ex II 2GD c T6 IIC T85°C	8411 0117 30
LZB14-L-AV007-11	0.16	0.21	320	4.8	3.5	6.8	5.0	9.6	7.1	700	4.0	8.5	0.33	0.73	a	Ex II 2GD c T6 IIC T85°C	8411 0117 48
Reversible (Keyed shaft)																	
LZB14-L-AR140-11	0.11	0.15	7000	0.15	0.11	0.24	0.18	0.3	0.22	13000	3.6	7.6	0.30	0.66	a	Ex II 2GD c T4 IIC T110°C	8411 0115 08
LZB14-L-AR034-11	0.11	0.15	1690	0.62	0.46	1.01	0.74	1.24	0.91	3400	3.6	7.6	0.30	0.66	a	Ex II 2GD c T6 IIC T85°C	8411 0115 16
LZB14-L-AR020-11	0.11	0.15	1020	1.03	0.76	1.67	1.23	2.1	1.5	2000	3.6	7.6	0.30	0.66	a	Ex II 2GD c T6 IIC T85°C	8411 0115 24
LZB14-L-AR008-11	0.11	0.15	410	2.6	1.92	4.2	3.1	5.2	3.8	800	3.6	7.6	0.33	0.73	a	Ex II 2GD c T6 IIC T85°C	8411 0115 32
LZB14-L-AR005-11	0.11	0.15	250	4.3	3.2	6.9	5.1	8.6	6.3	490	3.6	7.6	0.33	0.73	a	Ex II 2GD c T6 IIC T85°C	8411 0115 40

[1] For Shaft loading curves, see page 16.

NOTE: *- If running motors with 100% dry air and no lubrication, performance can be reduced with 5-15% at max output.*
-To optimize life time for a lubrication free motor, use lubricated air if the application allows it.

Dimensions (mm)
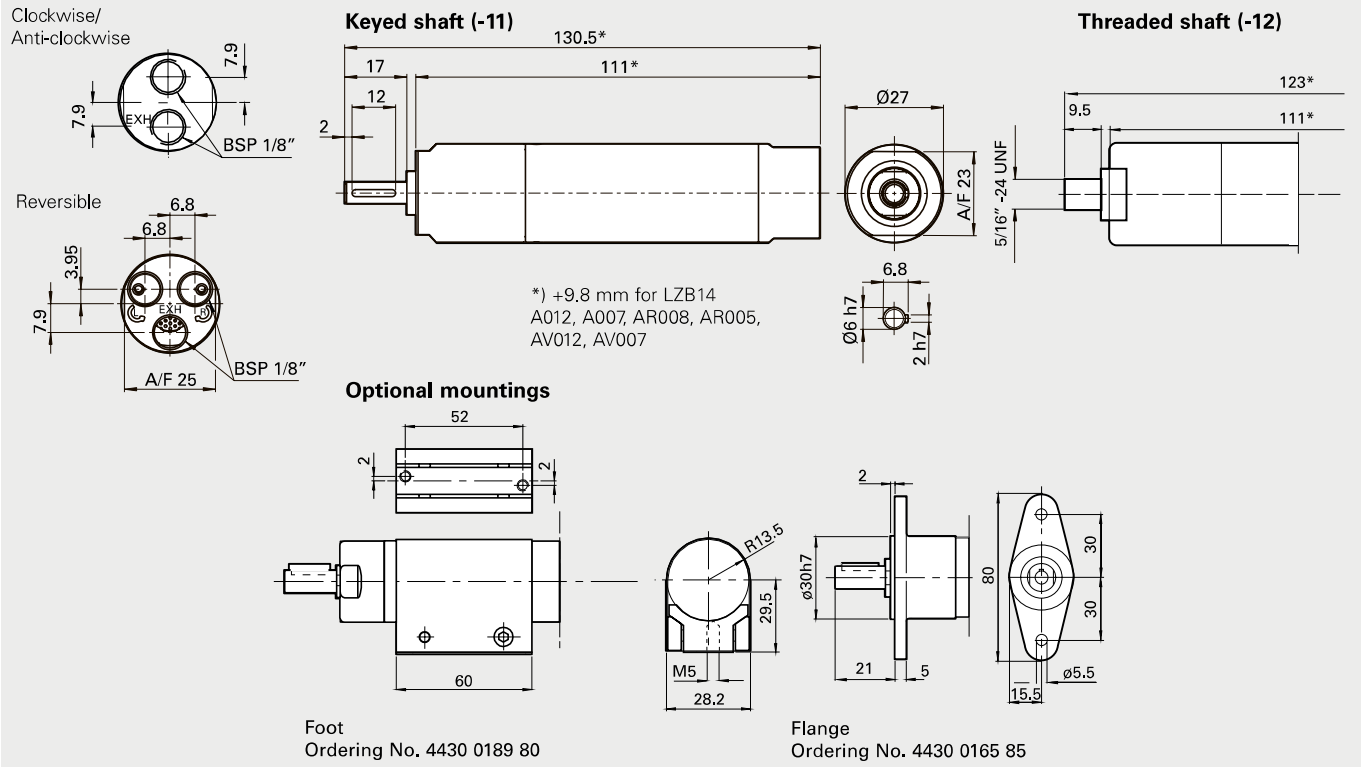
Conversion factor 1 mm = 0.04 inch